

Product data sheet

XS1N12PC410

Inductive sensor, XS1, M12, brass, Sn 2 mm, PNP, NO/NC, cable 2 m, L33 mm, 12...24 VDC

Main

Range of product	Telemecanique Inductive proximity sensors XS
Series name	General purpose
Sensor type	Inductive proximity sensor
Sensor name	XS1
Device application	Mobile equipment
Sensor design	Cylindrical M12
Size	37 mm
Body type	Fixed
Type of output signal	Discrete
Wiring technique	4-wire
Discrete output function	1 NO + 1 NC
Detector flush mounting acceptance	Flush mountable
Discrete output type	PNP
Material	Metal
Electrical connection	Cable
[Us] rated supply voltage	12...24 V DC with reverse polarity protection
Output circuit type	DC
Switching capacity in mA	<= 200 mA with overload and short-circuit protection
IP degree of protection	IP68 conforming to IEC 60529, IP65

Complementary

Enclosure material	Nickel plated brass
Detection face	Frontal
Thread type	M12 x 1
Front material	PPS

Sensing range	> 0...2.5 mm
Differential travel	1...15 % of Sr
Cable composition	4 x 0.22 mm²
Status LED	Output state: 1 LED (yellow)
Wire insulation material	PVC
Switching frequency	<= 5000 Hz
Voltage drop	<2 V (closed)
Current consumption	0...10 mA no-load
Delay first up	5 MILLISECOND
Delay response	0.1 MILLISECOND
Marking	CE
Delay recovery	0.1 MILLISECOND

Environment

Product certifications	CSA E2 UL
Vibration resistance	25 gn amplitude = +/- 2 mm (f = 10-55 Hz) conforming to IEC 60068-2-6
Shock resistance	50 gn for 11 ms conforming to IEC 60068-2-27

Packing Units

Unit type of package 1	PCE
Number of units in package 1	1
Package 1 height	4.2 CENTIMETER
Package 1 width	9.5 CENTIMETER
Package 1 length	13.2 CENTIMETER
Package 1 weight	0.081 KILOGRAM
Unit type of package 2	S02
Number of units in package 2	22
Package 2 height	15 CENTIMETER
Package 2 width	30 CENTIMETER
Package 2 length	40 CENTIMETER
Package 2 weight	2.117 KILOGRAM
Unit type of package 3	CAR
Number of units in package 3	1
Package 3 height	13.2 CENTIMETER
Package 3 width	4.2 CENTIMETER

Package 3 length	9.5 CENTIMETER
Package 3 weight	0.099 KILOGRAM
Indivisible sale quantity	1

Offer Sustainability

California proposition 65	WARNING: This product can expose you to chemicals including: Diisononyl phthalate (DINP), which is known to the State of California to cause cancer, and Di-isodecyl phthalate (DIDP), which is known to the State of California to cause birth defects or other reproductive harm. For more information go to www.P65Warnings.ca.gov

Technical Drawings

Dimensions

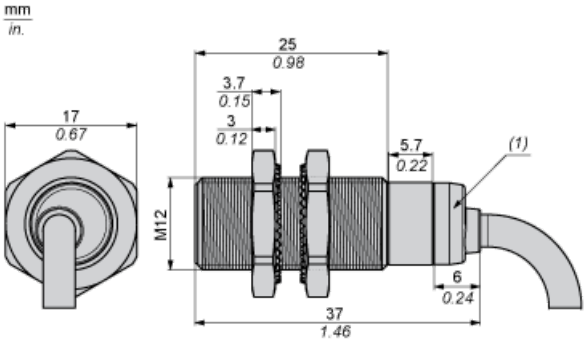

- (1) LED

Minimum Mounting Distances

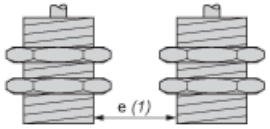

- e (1) ≥ 4 mm/0.16 in.

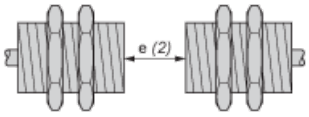

- e (1) ≥ 4 mm/0.16 in.
- e (2) ≥ 24 mm/0.94 in.

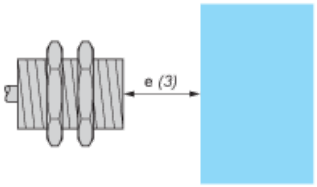

- e (1) ≥ 4 mm/0.16 in.
- e (2) ≥ 24 mm/0.94 in.
- e (3) ≥ 6 mm/0.24 in.

Wiring Schemes

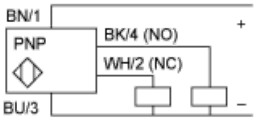

- BU : Blue
- BN : Brown
- BK : Black
- WH : White

Performance Curves

Standard Steel Target : 12x12x1 mm

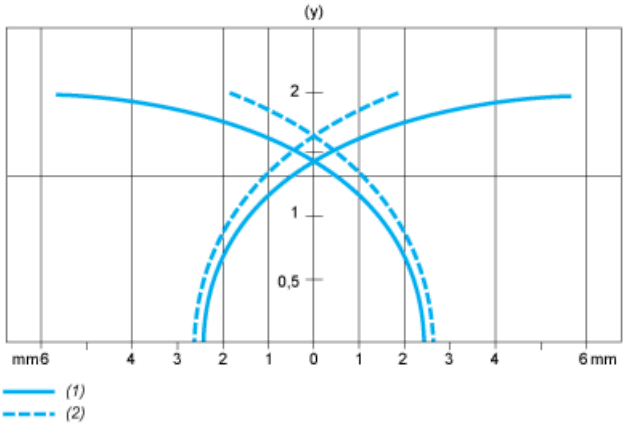

- (1) Pick-up points
- (2) Drop-out points (object approaching from the side)
- (y) Sensing distance in mm

The information provided in this documentation contains general descriptions and/or technical characteristics of the performance of the products contained herein.
This documentation is not intended as a substitute for and is not to be used for determining suitability or reliability of these products for specific user applications.
It is the duty of any such user or integrator to perform the appropriate and complete risk analysis, evaluation and testing of the products with respect to the relevant specific application or use thereof.
Neither TMSS Holding nor any of its affiliates or subsidiaries shall be responsible or liable for misuse of the information contained herein.

Updated: 09/07/2026